DIMNS MARKED DENOTES (S) SAFETY/REGULATION (F) CRITICAL FIT/FUNCTION (M) MAJOR FIT/FUNCTION (MI) MINOR FIT/FUNCTION

DIM 'A'	DIM 'B'	FINISH GRIND SIZE	BEFORE POST CHROME GRINDING	PLATING THK. AFTER POST CHROME GRINDING, DIM 'C' (F)	Ø'C' (F)
154.1	92.1	Ø13.938~13.949	18±3μ	15±3μ	Ø13.960~13.986

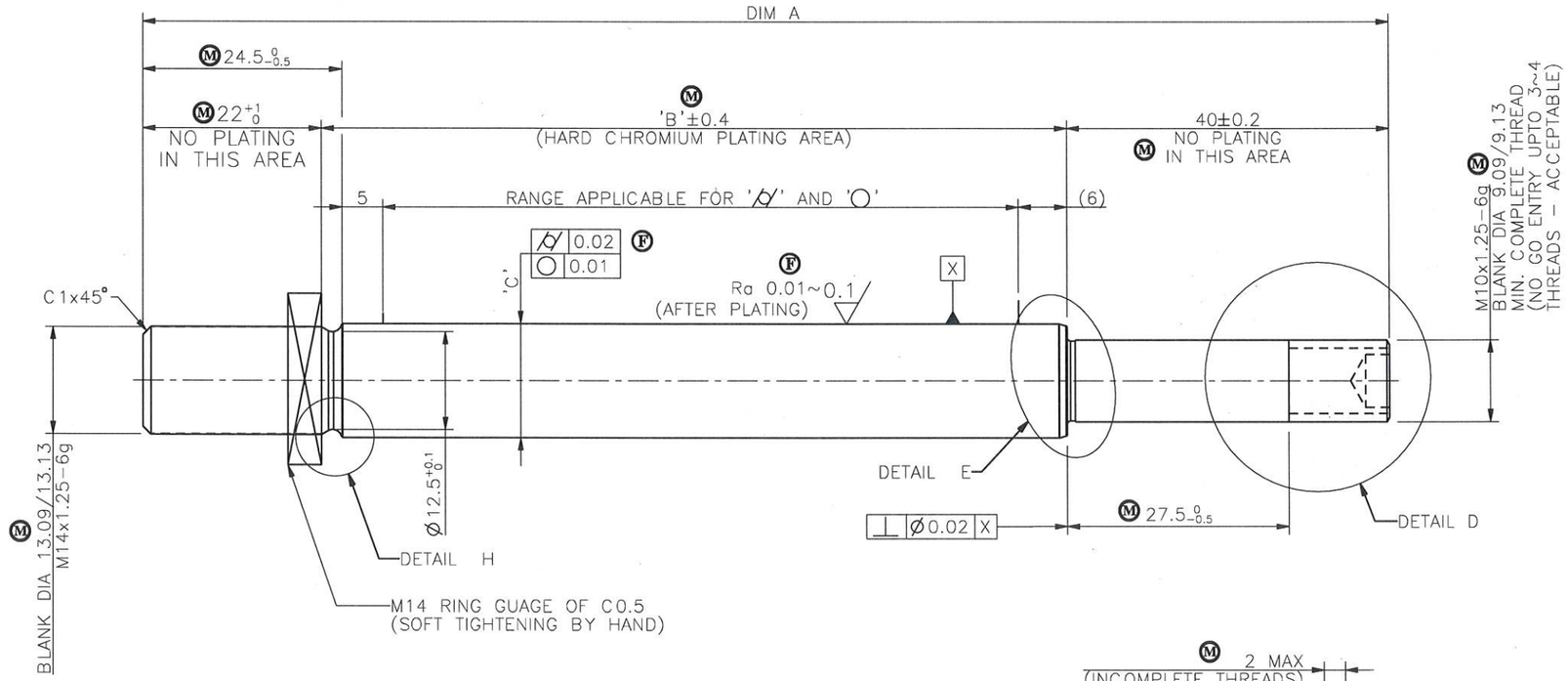

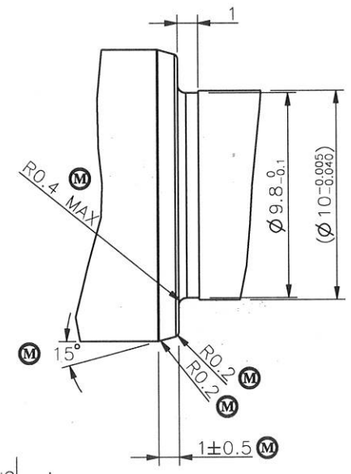

DETAIL E
SCALE 10:1

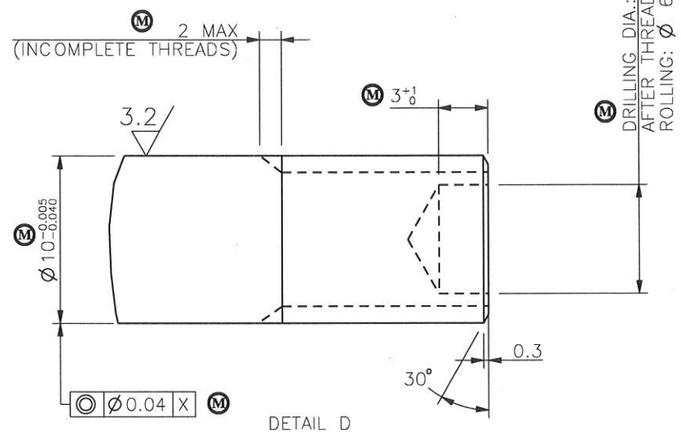

DETAIL D

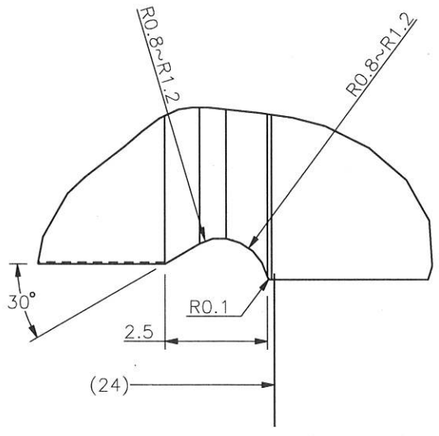

DETAIL H
SCALE 10:1

NOTE:

1. TO BE GROUND TO FINISH SIZE AFTER PLATING. MATERIAL REMOVAL 3~5μ ON DIAMETER.
2. MUST BE FREE FROM PIN HOLE, ROUGH SURFACE & BLISTER AFTER PLATING.
3. (M) MUST BE NO CHATTER, SCRATCH, ABRASION AND BRUSIE ON SURFACE
4. (M) CHROME HARDNESS : HV 800 MIN. / 50gms LOAD
5. PARTING PIP NOT PERMITTED

6a. (F) CORROSION RESISTANCE : UP TO 24 Hrs CASS TEST, RATING NO.9 MIIN

6b. PLATING VALIDATION : CORROSION TEST AS MENTIONED, OTHER PARAMETERS AS PER GSP 0103.

DATE	REV	ALTERATION	E.C.N.No
30.06.21	A1	RELEASED FOR COSTING & FEASIBILITY	21/012

SUPERSEDES :
GENERAL TOLERANCE ASPER :PE /GT/001
DESIGN SOURCE REF.
RELEASE FOR: ■ COSTING ■ PROTOTYPE □ OTS □ PRE-PRODUCTION □ PRODUCTION

GABRIEL INDIA LTD.

SCALE	SHEETS	FINISH:	MASS:
1:1	1	REFER TABLE	157 g

DRAWN BY: RAJAT SHARMA
DATE: 01.09.2021
CHECKED BY: SANJAY TIKKE
DATE: 01.09.2021
APPROVED BY: DIWAKAR BHAT
DATE: 01.09.2021

NAME:- PISTON ROD
MATERIAL:- SAE 1035 (R.M = Ø14.25±0.04) (F) AS PER GP 136-3
PART NO:- RS440-RR-009 REV. A1

ALL DIMENSIONS ARE IN MM. | NO MANUAL ALTERATION | DO NOT SCALE | IF IN DOUBT PLEASE ASK | SIZE : A2

RS440-RSA

FILE ARCHIVE LOCATION:

CONFIDENTIAL: THIS DRAWING AND THE INFORMATION THEREIN ARE THE PROPERTY OF GABRIEL INDIA LTD., AND SHALL NOT BE REPRODUCED, COPIED RECORDED IN ANY MEDIA, USED FOR ANY OTHER PURPOSE OR DELIVERED AND/OR DISCLOSED TO ANY THIRD PARTY WITHOUT WRITTEN CONSENT OF GABRIEL.